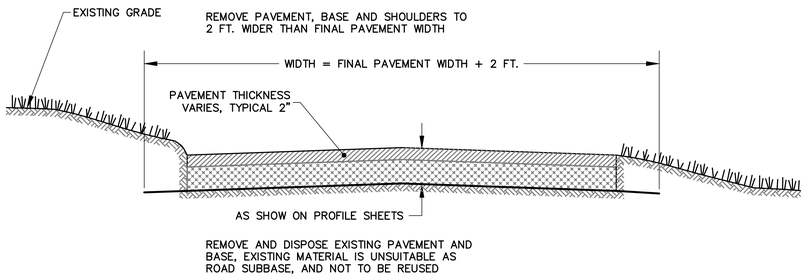

EXISTING ROAD REMOVAL DETAIL
NOT TO SCALE

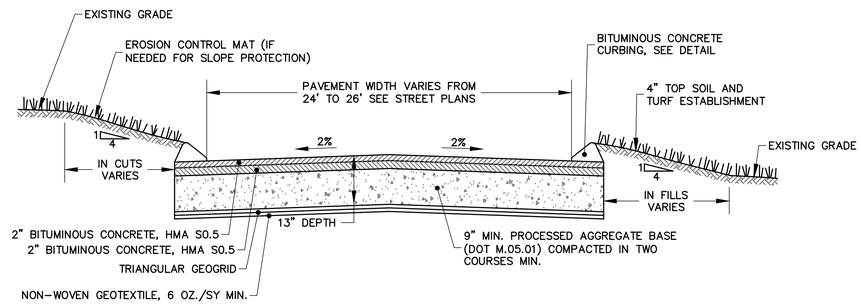

TYPICAL ROAD CROSS SECTION
NOT TO SCALE

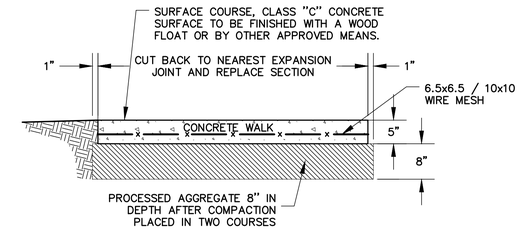

SIDEWALK REPAIR
NOT TO SCALE

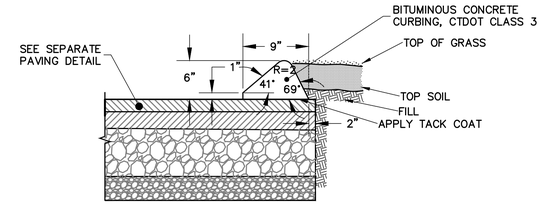

BITUMINOUS CURBING DETAIL
NOT TO SCALE

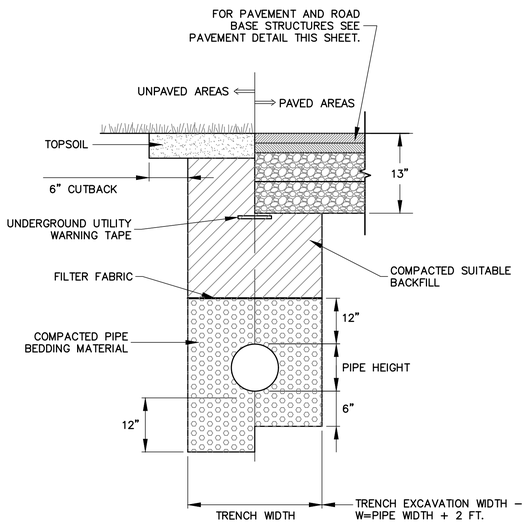

UTILITY TRENCH
NOT TO SCALE

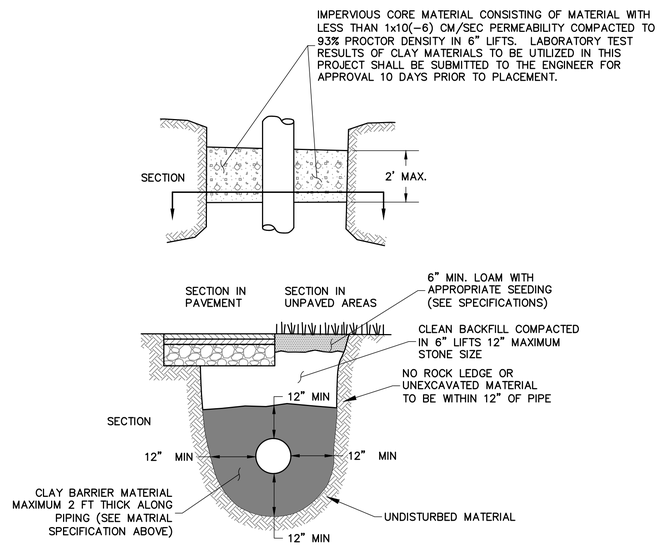

ANTI-SEEPAGE COLLAR DETAIL
NOT TO SCALE

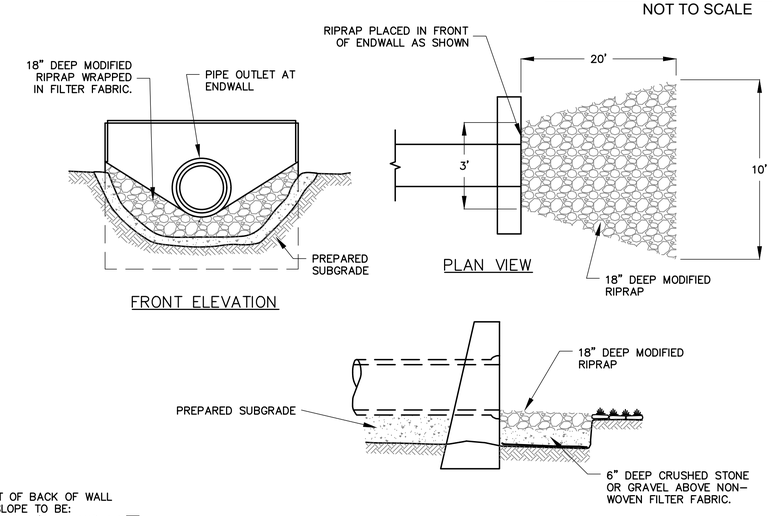

RIPRAP OUTFALL DETAIL
NOT TO SCALE

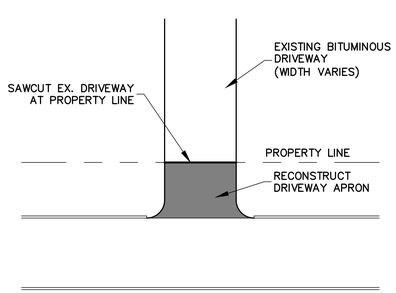

DRIVEWAY RECONSTRUCTION
NOT TO SCALE

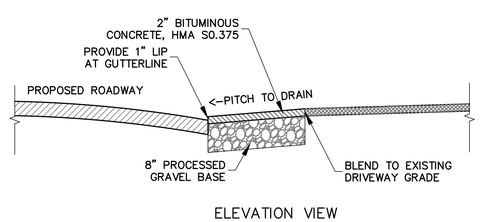

DRIVEWAY RECONSTRUCTION
NOT TO SCALE

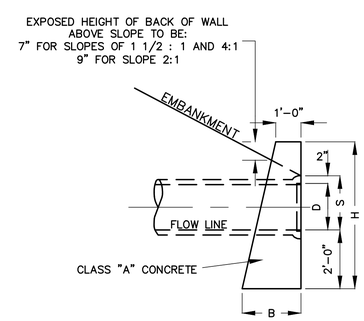

WALL AT FOOT OF SLOPE

H – TOTAL HEIGHT OF ENDWALL
B – BASE D – INSIDE DIAMETER OF PIPE
S – HEIGHT OF SLOPE ABOVE FLOW LINE AT FACE OF WALL – MINIMUM = D+2
L – LENGTH OF WALL = 35+D

ALL EDGES OF EXPOSED SURFACES TO BE CHAMFERED APPROXIMATELY ONE INCH.

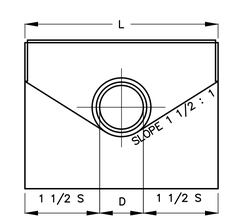

FRONT ELEVATION

NOTE :

ALL CONSTRUCTION DIMENSIONS ARE NOMINAL WHEN ONE ENDWALL IS TO BE USED FOR TWO PIPES, THE DIMENSIONS OF THAT ENDWALL SHALL CONFORM TO THAT REQUIRED FOR THE LARGER PIPE, EXCEPT THE DIMENSION "L" SHALL BE INCREASED BY THE OUTSIDE DIAMETER OF THE SMALLER PIPE PLUS ONE FOOT.

DIMENSION AND QUANTITIES FOR ONE ENDWALL BASED ON S = D+2"

D	S	H	L	BATTER	B	VOL.
IN.	FT. & IN.	FT. & IN.	FT. & IN.	IN./FT.	FT. & IN.	CU.YD.
12"	1'-2"	4'-6"	4'-6"	2-½"	1'-11½"	1.10
15"	1'-5"	4'-9"	5'-6"	2-½"	1'-11⅞"	1.45
18"	1'-8"	5'-0"	6'-6"	2-½"	2'-½"	1.83
24"	2'-2"	5'-6"	8'-6"	2-½"	2'-1¾"	2.72
30"	2'-8"	6'-0"	10'-6"	2-½"	2'-3"	3.79
36"	3'-2"	6'-6"	12'-6"	3"	2'-7½"	5.45
42"	3'-8"	7'-0"	14'-6"	3"	2'-9"	6.40
48"	4'-2"	7'-6"	16'-6"	3"	2'-10½"	8.00

* VOLUME BASED ON "D" AND WALL THICKNESS AT OF PIPE HAS BEEN DEDUCTED

STANDARD ENDWALL
NOT TO SCALE

Designed By: JED
Drawn By: JED/KLD
Checked By: JEE
CAD File: SITE DETAILS

Drawing date: June 27, 2016
Drawing Scale: N.T.S.

Rev.	Date	Revision	By

SITE DETAILS

PREPARED FOR
RAYMOND PLACE NEIGHBORHOOD
TOWN OF CROMWELL
Cromwell, Connecticut

Lenard Engineering, Inc.
CIVIL ENVIRONMENTAL AND HYDROGEOLOGICAL CONSULTANTS
2210 MAIN STREET GLASTONBURY, CT (860) 659-3100
140 WILLOW STREET WINSTED, CT (860) 379-6669
19 MIDSTATE DRIVE AUBURN, MA (508) 721-7600

Drawing #: D1

Job #: 12–397

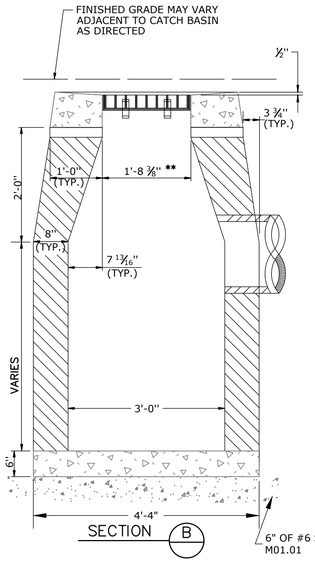

TYPE "C–L" CATCH BASIN

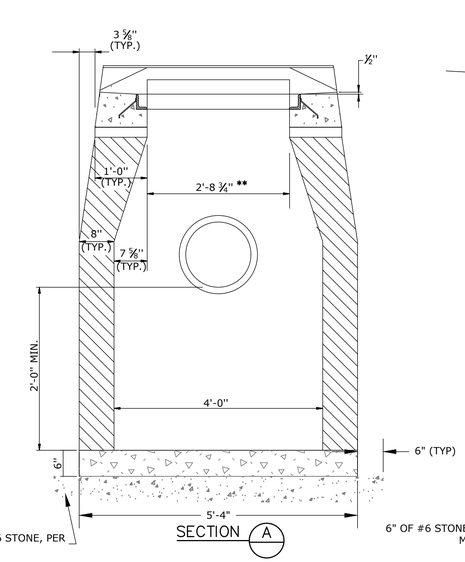

TYPE "C" & "C–L" CATCH BASIN
(TYPE "C" TOP SHOWN)

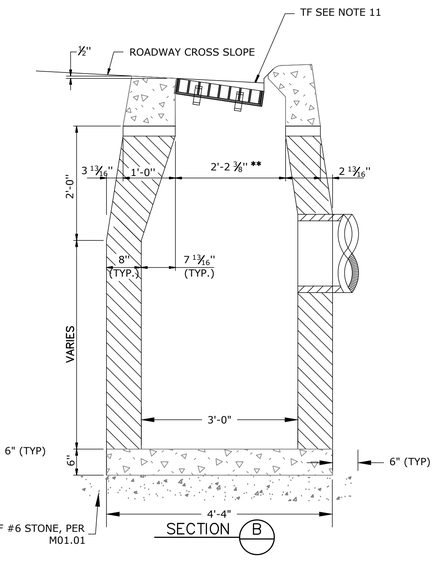

TYPE "C" CATCH BASIN

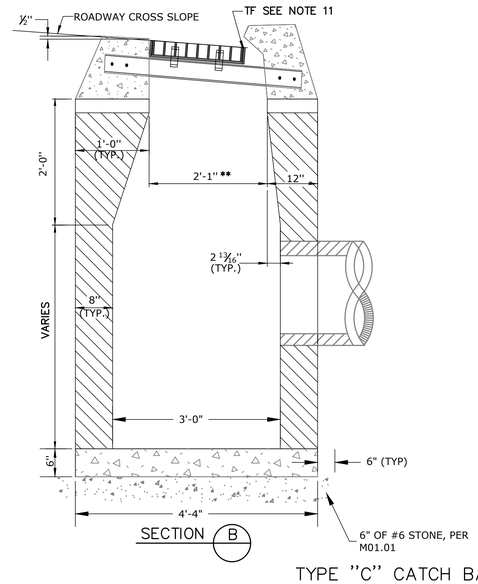

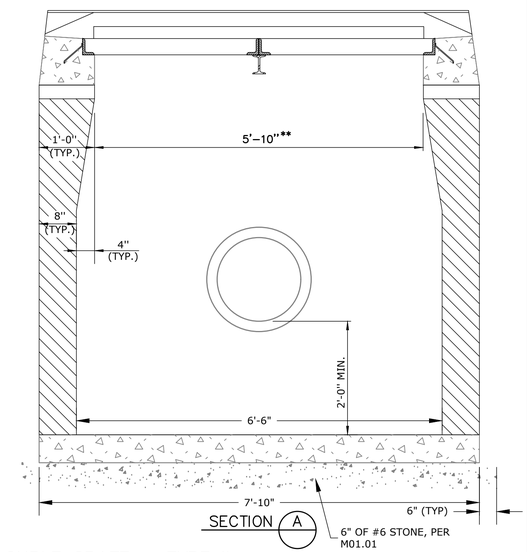

TYPE "C" CATCH BASIN DOUBLE GRATE – TYPE II

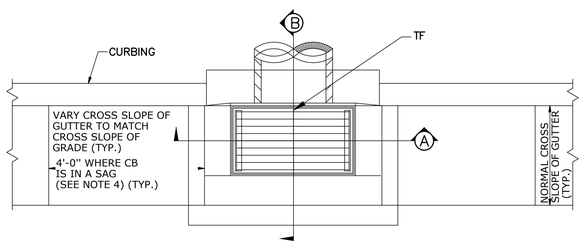

PLAN

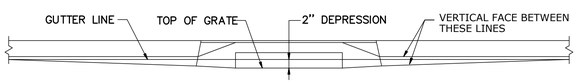

FOR CATCH BASINS IN A LINE OF 6" BITUMINOUS CONCRETE LIP CURBING (MACHINE FORMED)

DETAILS OF DEPRESSED GUTTER STRIP FOR TYPE "C" CATCH BASIN

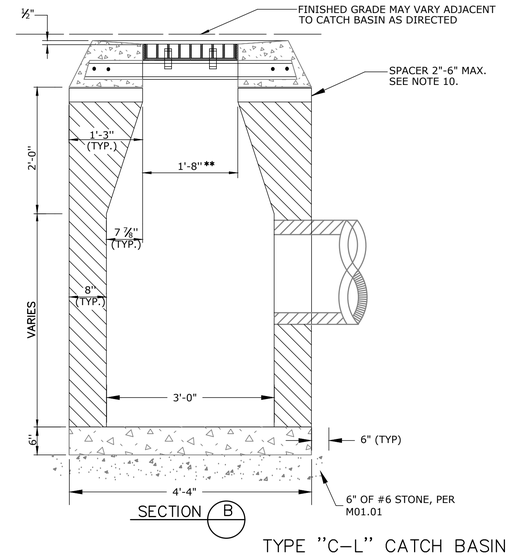

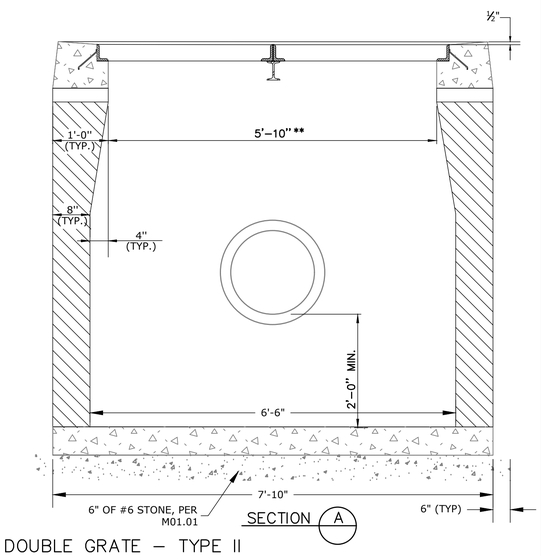

TYPE "C–L" CATCH BASIN DOUBLE GRATE – TYPE II

GENERAL NOTES:

1. FOR DETAILS OF FRAME AND GRATE SEE CONNECTICUT DEPARTMENT OF TRANSPORTATION STANDARD SHEET.
2. USE APPROPRIATE CONCRETE TOP FOR CURBING SHOWN ON PLANS. IF CURBING IS NOT SPECIFIED ON THE PLANS, IT SHALL BE CONSTRUCTED AS DIRECTED BY THE ENGINEER.
3. ALL FACES OF STRUCTURES IN CONTACT WITH CONCRETE PAVEMENT SHALL BE COVERED WITH A LAYER OF TAR PAPER OR APPROVED EQUAL. THE COST FOR THE PAPER SHALL BE INCLUDED IN THE BID PRICE FOR THE TYPE OF CATCH BASIN INSTALLED.
4. USE 6'-0" ON UPGRADE SIDE OF CONTINUOUS GRADE AND 1'-0" ON DOWNGRADE SIDE OF CONTINUOUS GRADE OR AS DIRECTED.
5. IF MASONRY UNITS ARE REQUIRED, THE BASIN SHALL BE CONSTRUCTED IN CONFORMANCE WITH THE OVER ALL DIMENSIONS SHOWN HERE AND SECTION 5.07 OF THE STATE OF CONNECTICUT'S STANDARD SPECIFICATIONS. CORBELLING SHALL BE PERMITTED TO A MAXIMUM OF 3" NO PROJECTION SHALL EXTEND INSIDE THE LIMITS NOTED BY **.
6. WALL THICKNESS OF ALL CB'S OVER 10' DEEP SHALL BE INCREASED TO 12" THICK. INSIDE DIMENSION SHALL REMAIN THE SAME. 12" THICKNESS WILL START AFTER THE FIRST 10'.
7. TO CONVEY SUBSURFACE DRAINAGE, OPENINGS SHALL BE FORMED IN THE FOUR WALLS AT OR IMMEDIATELY ABOVE THE BOTTOM OF THE PERVIOUS BACKFILL.
8. MINIMUM CONCRETE COMPRESSIVE STRENGTH OF F'c = 4000 PSI SHALL BE OBTAINED PRIOR TO SHIPPING.
9. LATEST STATE OF CONNECTICUT'S STANDARD SPECIFICATIONS AND SUPPLEMENTALS SHALL GOVERN.
10. SPACER MAY BE CMU OR PRECAST WITH REQUIRED REINFORCING (RECOMMENDED BY THE MANUFACTURER) AS NEEDED TO PROVIDE PROPER GRADE SHOWN ON PLANS.
11. TOP OF FRAME (TF) ELEVATION SHALL BE MEASURED IN THE CENTER OF GRATE @ GUTTER LINE.

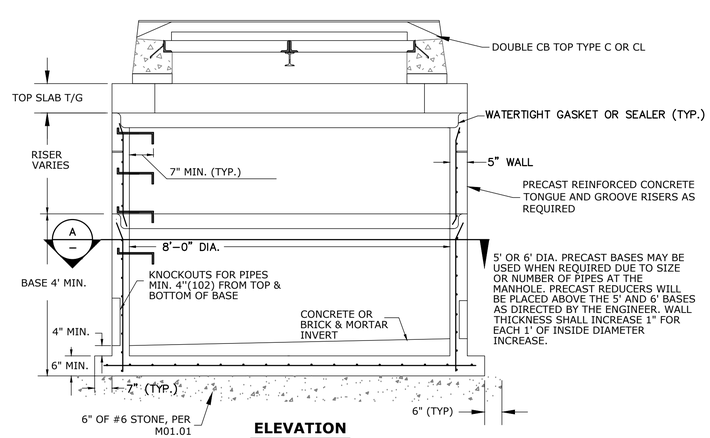

ELEVATION

DOUBLE CATCH BASIN WITH 8' Ø MANHOLE BASE

REINFORCED PRECAST CONCRETE UNIT

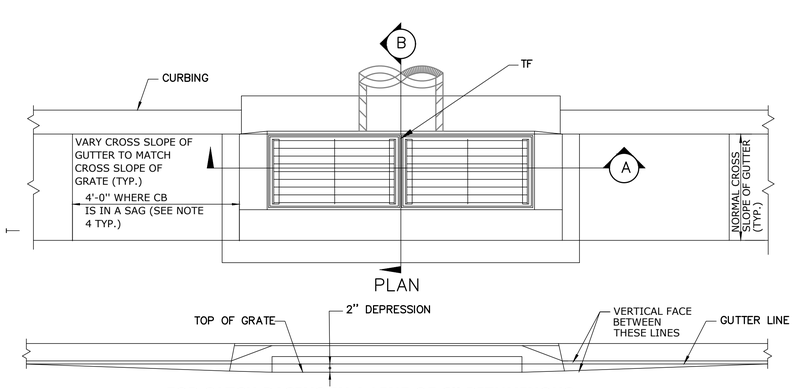

FOR CATCH BASINS IN A LINE OF 6" BITUMINOUS CONCRETE LIP CURBING (MACHINE FORMED)

DETAILS OF DEPRESSED GUTTER STRIP FOR TYPE "C" CATCH BASIN DOUBLE GRATE TYPE II

Designed By: JED
Drawn By: JED/KLD
Checked By: JEE
CAD File: SITE DETAILS

Drawing Scale: N.T.S.

Rev.	Date	Revision	By

Drawing date: June 27, 2016

DRAINAGE DETAILS

PREPARED FOR

RAYMOND PLACE NEIGHBORHOOD
TOWN OF CROMWELL
Cromwell, Connecticut

Lenard Engineering, Inc.
CIVIL ENVIRONMENTAL AND HYDROGEOLOGICAL CONSULTANTS
2210 MAIN STREET GLASTONBURY, CT (860) 659-3100
140 WILLOW STREET WINSTED, CT (860) 379-6669
19 MIDSTATE DRIVE AUBURN, MA (508) 721-7600

Drawing #: D2

Job #: 12–397

GENERAL NOTES:

1. CHANNELS MAY BE SHAPED IN CONCRETE BASE OF MANHOLE OR FORMED USING BRICK OR MASONRY.
2. A FRAME DIAMETER OF 3'-3" WITH 4" FLANGE MUST BE USED WHEN THE TOP DIAMETER OF THE PRECAST CONE IS LESS THAN 3'-6". ALL OTHER FRAME DIMENSIONS SHALL REMAIN THE SAME.
3. COVER:

	CAST IRON	STEEL
MIN. COVER WEIGHT	134LB.	134LB.

4. ALL DIMENSIONS SUBJECT TO MANUFACTURING TOLERANCES.

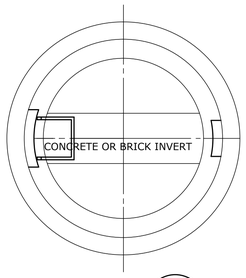

SECTION A -

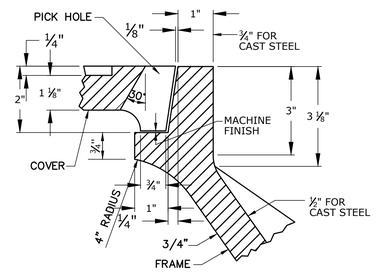

DETAIL OF SEAT

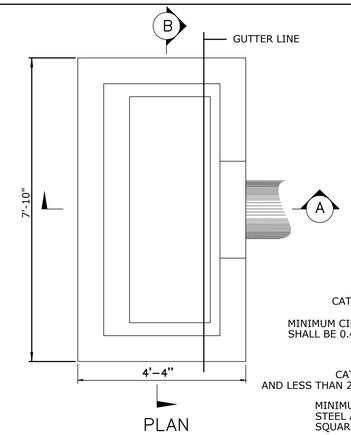

PLAN

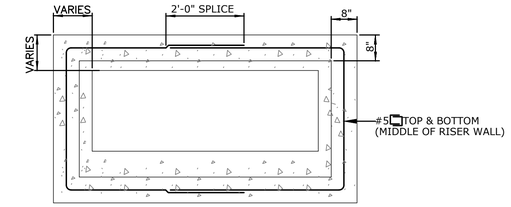

REDUCER SECTION (TYP.)

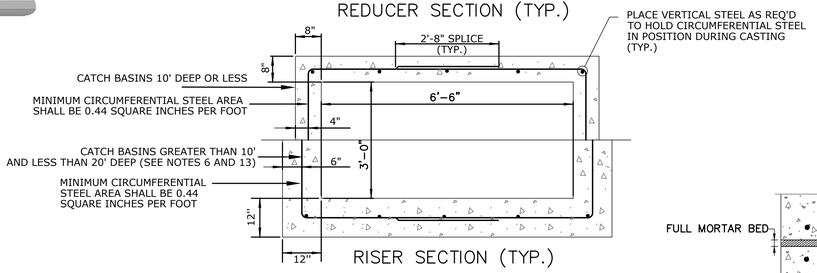

RISER SECTION (TYP.)

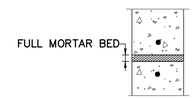

MORTAR JOINT DETAIL

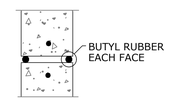

BUTYL RUBBER JOINT DETAIL

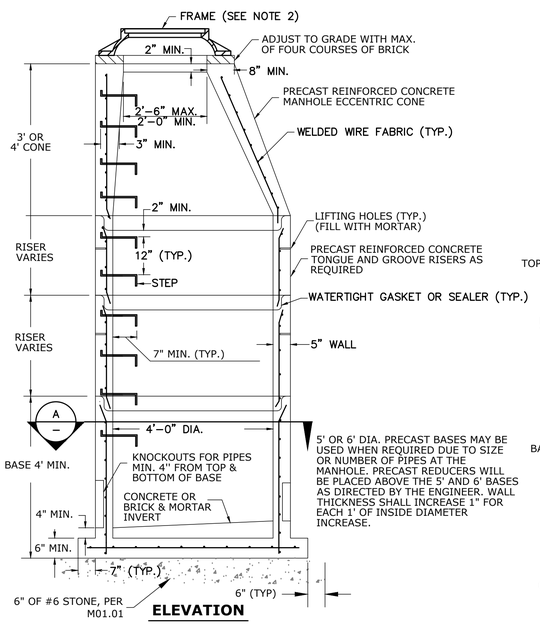

ELEVATION

MANHOLE

REINFORCED PRECAST CONCRETE UNIT

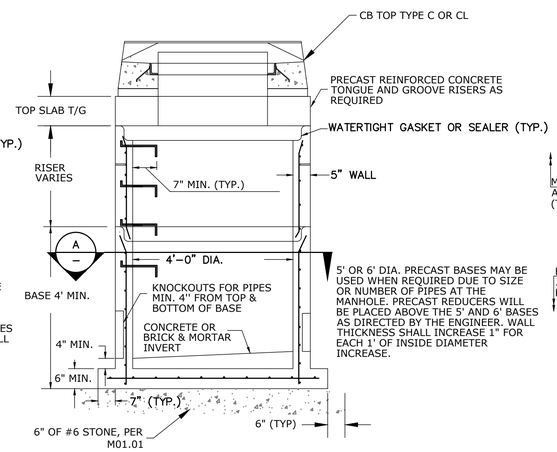

ELEVATION

CATCH BASIN WITH MANHOLE BASE

REINFORCED PRECAST CONCRETE UNIT

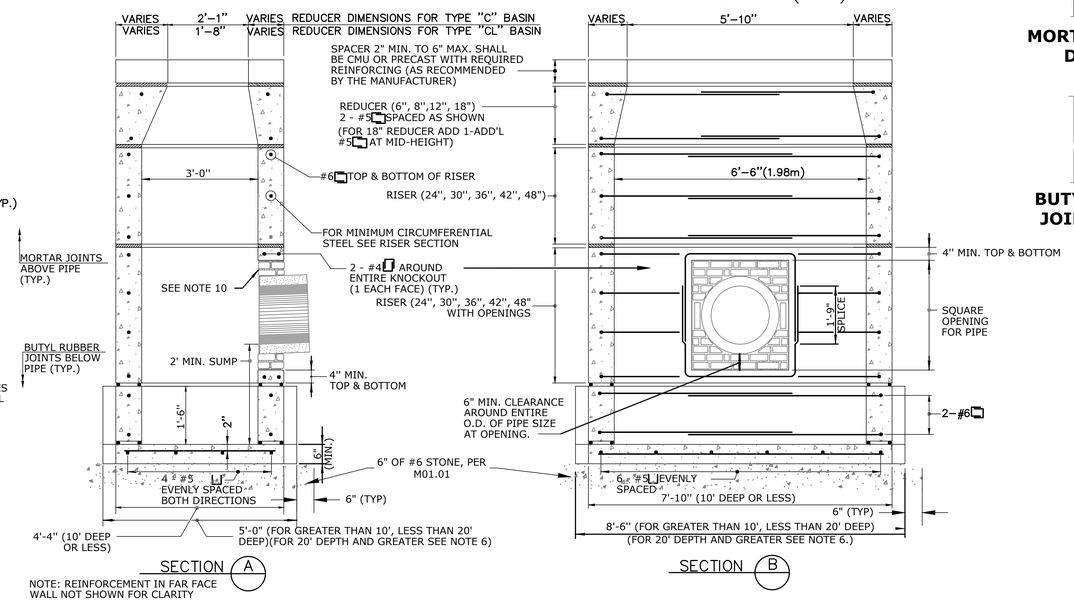

SECTION A

NOTE: REINFORCEMENT IN FAR FACE WALL NOT SHOWN FOR CLARITY

SECTION B

PRECAST CONCRETE TYPE "C" & "C-L" DOUBLE GRATE TYPE II CATCH BASIN

(UNDER 10' DEEP SHOWN)

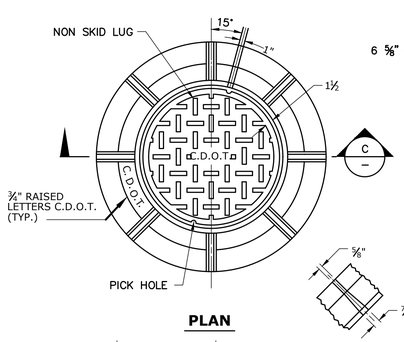

PLAN

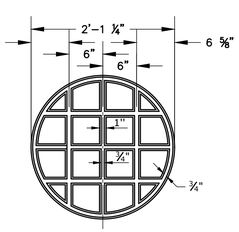

UNDERSIDE OF COVER DETAIL

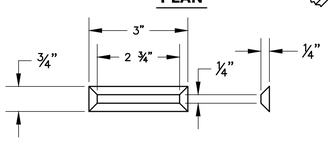

NON SKID LUG DETAIL

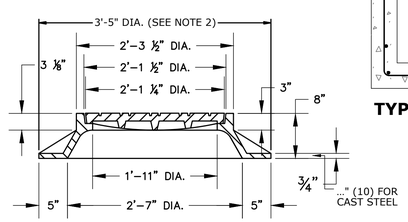

SECTION C -

FRAME AND COVER DETAILS

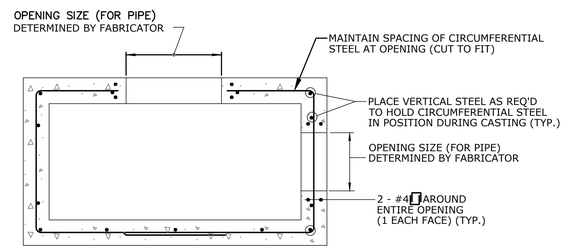

TYPICAL SECTION THRU SINGLE RISER WITH OPENINGS

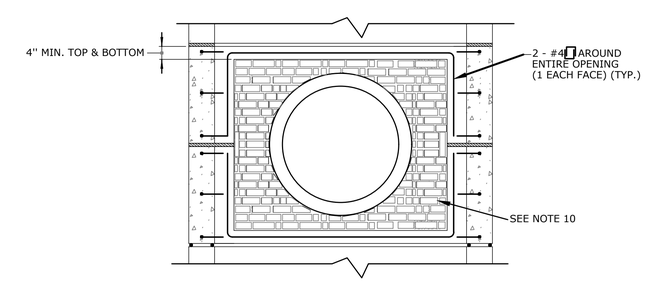

DOUBLE RISER OPENING (TYP.) PIPES GREATER THAN 24" O.D.

Designed By:	JED
Drawn By:	JED/KLD
Checked By:	JEE
CAD File:	SITE DETAILS

Drawing Scale: N.T.S.

Drawing date: June 27, 2016

Rev.	Date	Revision	By

DRAINAGE DETAILS

PREPARED FOR

RAYMOND PLACE NEIGHBORHOOD

TOWN OF CROMWELL

Cromwell, Connecticut

Lenard Engineering, Inc.

CIVIL, ENVIRONMENTAL AND HYDROGEOLOGICAL CONSULTANTS

2210 MAIN STREET GLASTONBURY, CT (860) 659-3100

140 WILLOW STREET WINSTED, CT (860) 379-6669

19 MIDSTATE DRIVE AUBURN, MA (508) 721-7600

Drawing #: D3

Job #: 12-397

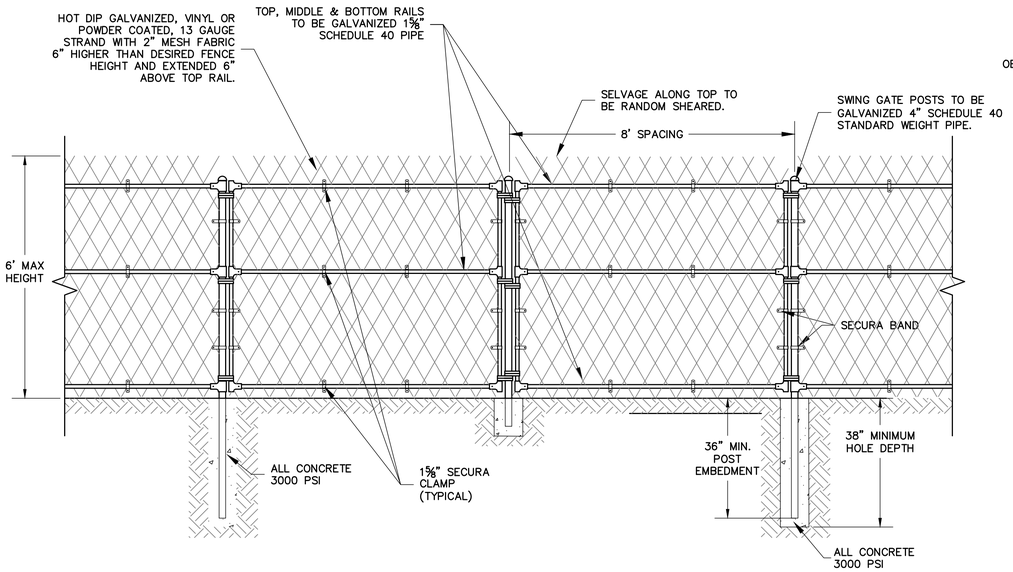

SECURITY FENCE/GATE DETAIL
NOT TO SCALE

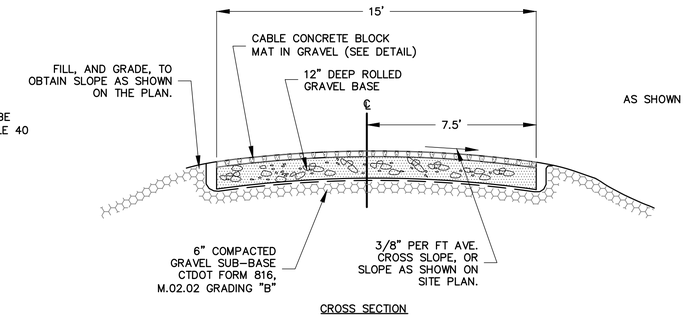

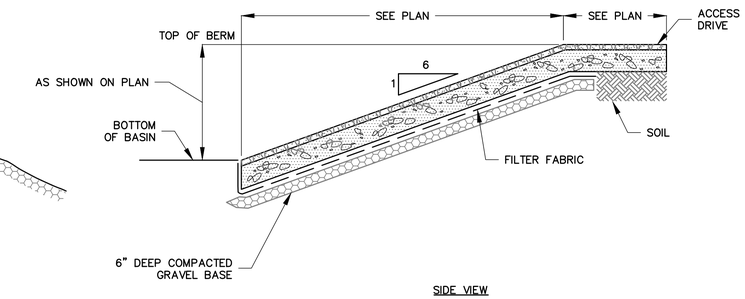

CABLED CONCRETE ACCESS RAMP
NOT TO SCALE

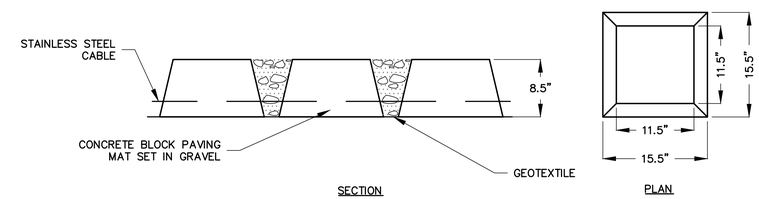

CONCRETE BLOCK PAVING MAT
NOT TO SCALE

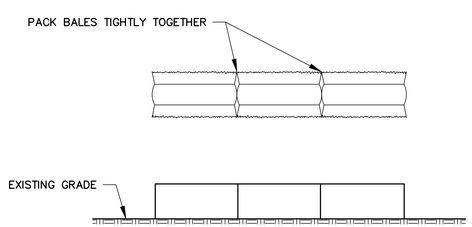

HAYBALE BARRIER ON PAVEMENT
NOT TO SCALE

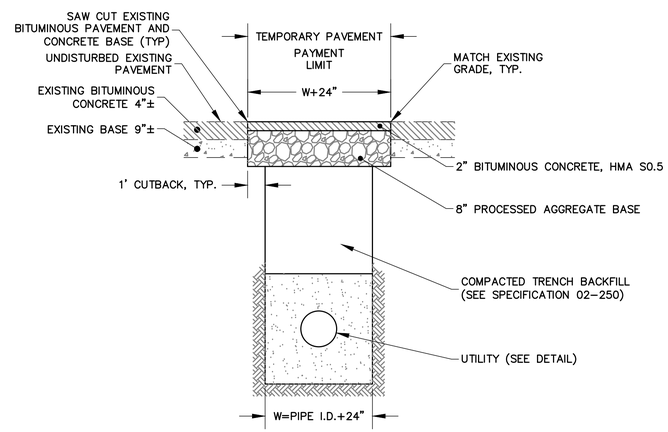

TEMPORARY PAVEMENT DETAIL
NOT TO SCALE

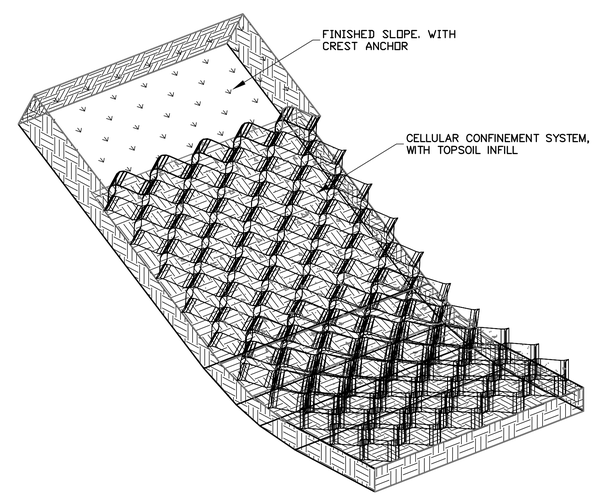

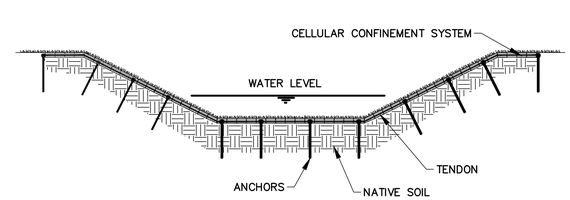

TYPICAL CELLULAR CONFINEMENT SYSTEM DETAIL
NOT TO SCALE

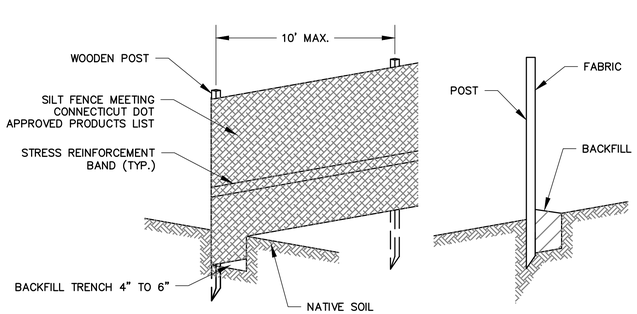

SILT FENCING DETAIL
NOT TO SCALE

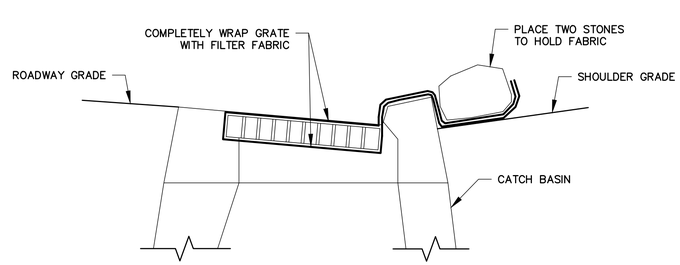

CATCH BASIN PROTECTION
NOT TO SCALE

Designed By: JED
Drawn By: JED
Checked By: JEE
CAD File: SITE DETAILS

Drawing Scale: AS SHOWN

Rev.	Date	Revision	By

Drawing date: June 27, 2016

SITE DETAILS

PREPARED FOR
RAYMOND PLACE NEIGHBORHOOD
TOWN OF CROMWELL
Cromwell, Connecticut

Lenard Engineering, Inc.
CIVIL, ENVIRONMENTAL AND HYDROGEOLOGICAL CONSULTANTS
2210 MAIN STREET GLASTONBURY, CT (860) 659-3100
140 WILLOW STREET WINSTED, CT (860) 379-6669
19 MIDSTATE DRIVE AUBURN, MA (508) 721-7600

Drawing #: D4

Job #: 12-397

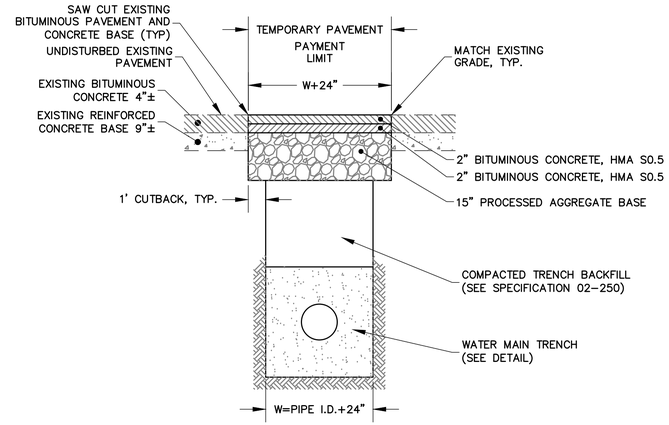

TEMPORARY PAVEMENT DETAIL
TRENCHES PERPENDICULAR TO EDGE OF PAVEMENT STATE ROADS
NOT TO SCALE

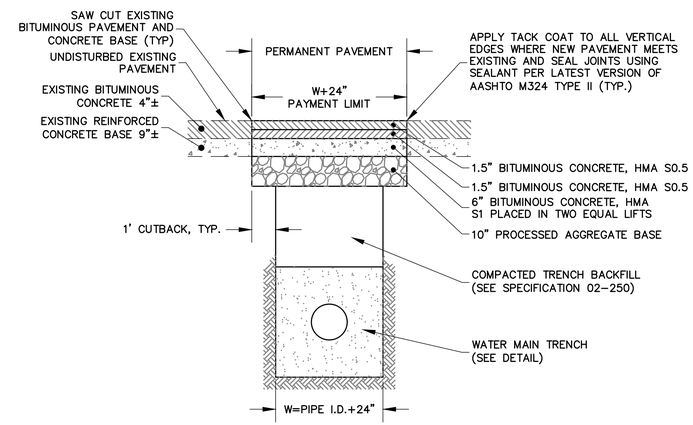

PERMANENT PAVEMENT TRENCH DETAIL
TRENCHES PERPENDICULAR TO EDGE OF PAVEMENT STATE ROADS
NOT TO SCALE

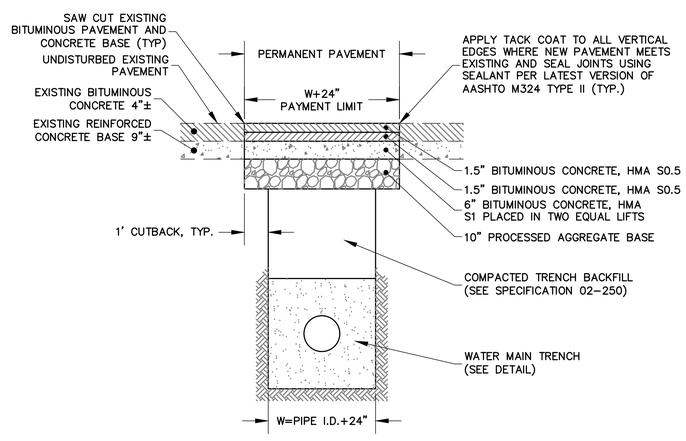

PERMANENT PAVEMENT TRENCH DETAIL
TRENCHES PARALLEL TO EDGE OF PAVEMENT STATE ROADS
NOT TO SCALE

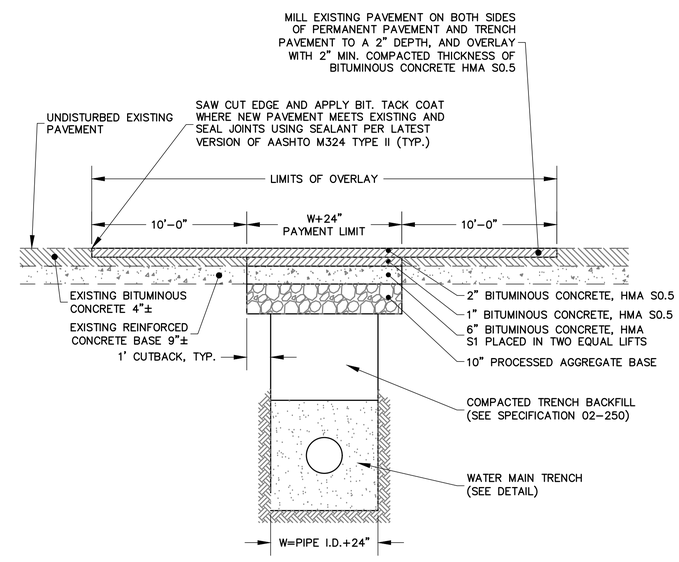

MILLING AND OVERLAY
TRENCHES PERPENDICULAR TO EDGE OF PAVEMENT STATE ROADS
NOT TO SCALE

Designed By: JED
Drawn By: JED
Checked By: JEE
CAD File: PSitePlan

Drawing date: June 27, 2016
Drawing Scale: N.T.S.

Rev.	Date	Revision	By

STATE ROAD PAVING DETAILS

PREPARED FOR
RAYMOND PLACE NEIGHBORHOOD
TOWN OF CROMWELL
Cromwell, Connecticut

Lenard Engineering, Inc.
CIVIL, ENVIRONMENTAL AND HYDROGEOLOGICAL CONSULTANTS
221 O Main Street, Glastonbury, CT (860) 659-3100
140 Willow Street, Winsted, CT (860) 379-6669
19 Midstate Drive, Auburn, MA (508) 721-7600

Drawing #: D5

Job #: 14-421

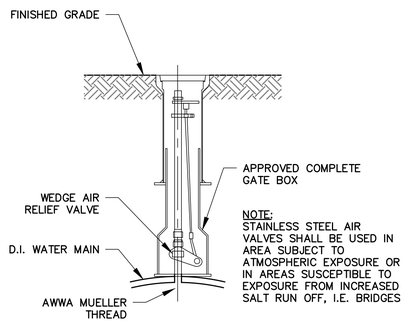

AIR VALVE
NOT TO SCALE

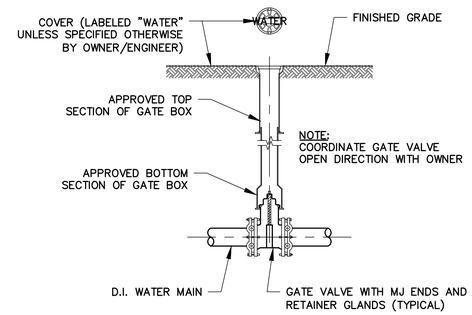

GATE VALVE
NOT TO SCALE

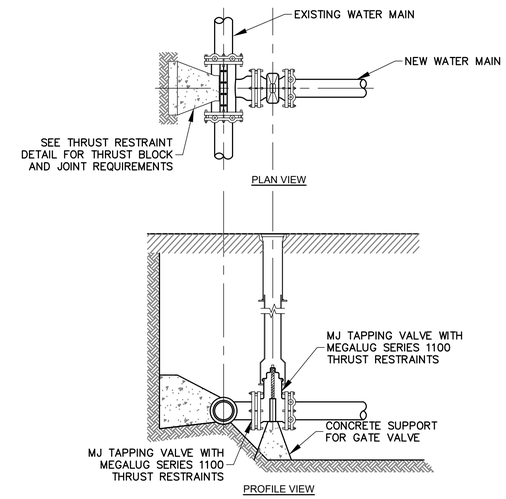

TAPPING SLEEVE & VALVE
NOT TO SCALE

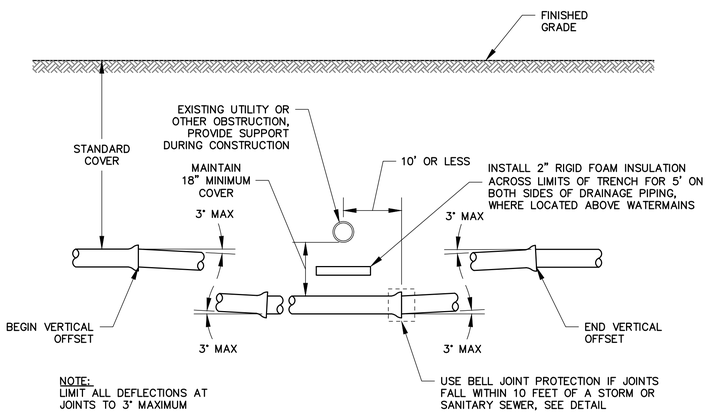

GRADUAL VERTICAL OFFSET
NOT TO SCALE

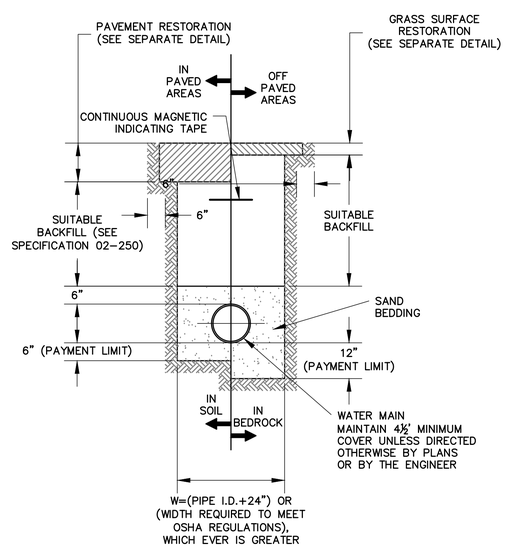

WATER MAIN TRENCH
NOT TO SCALE

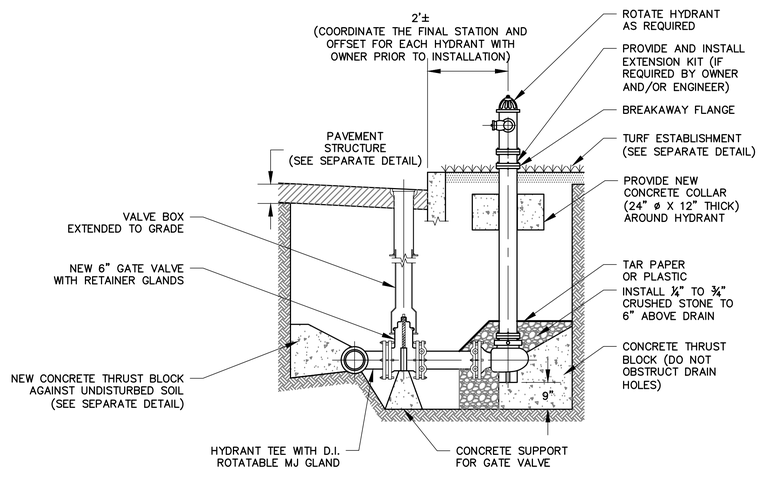

HYDRANT ASSEMBLY
NOT TO SCALE

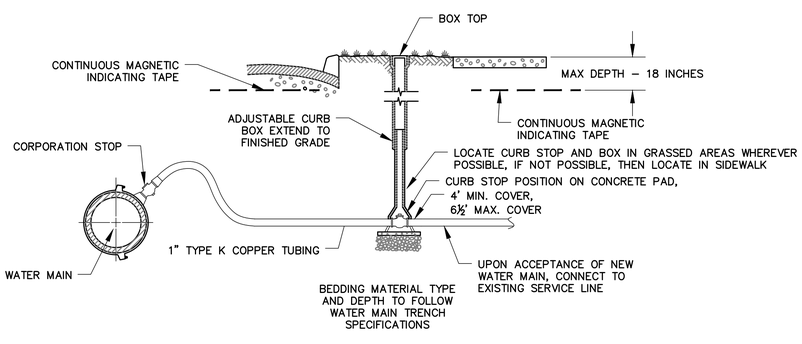

TYPICAL 1" WATER SERVICE CONNECTION
NOT TO SCALE

Designed By: JED
Drawn By: JED
Checked By: JEE
CAD File: PSitePlan

Drawing date: June 27, 2016
Drawing Scale: N.T.S.

Rev.	Date	Revision	By

WATER DETAILS

PREPARED FOR
RAYMOND PLACE NEIGHBORHOOD
TOWN OF CROMWELL
Cromwell, Connecticut

Lenard Engineering, Inc.
CIVIL, ENVIRONMENTAL AND HYDROGEOLOGICAL CONSULTANTS
2210 MAIN STREET GLASTONBURY, CT (860) 659-3100
140 WILLOW STREET WINSTED, CT (860) 379-6669
19 MIDSTATE DRIVE AUBURN, MA (508) 721-7600

Drawing #: D6

Job #: 14–421

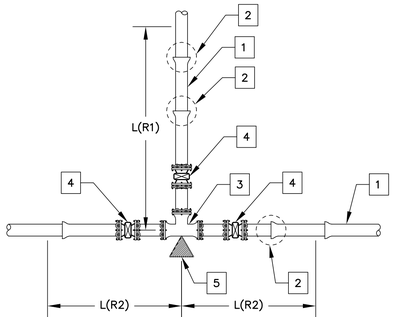

TEE WITH BRANCH LINE (PLAN VIEW)
NOT TO SCALE

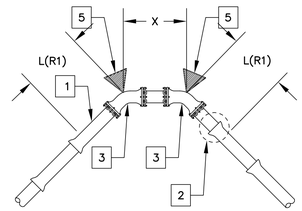

COMBINED HORIZONTAL BENDS (PLAN VIEW)-USE WHEN X<18 FT
NOT TO SCALE

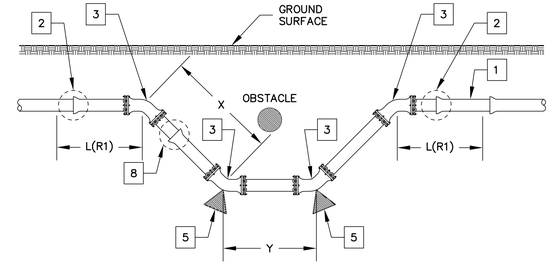

COMBINED VERTICAL OFFSET-BENEATH OBSTACLE (PROFILE VIEW)-USE WHEN X & Y < 18 FT
NOT TO SCALE

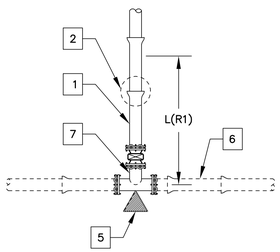

TAPPING SLEEVE & VALVE FOR BRANCH LINE (PLAN VIEW)
NOT TO SCALE

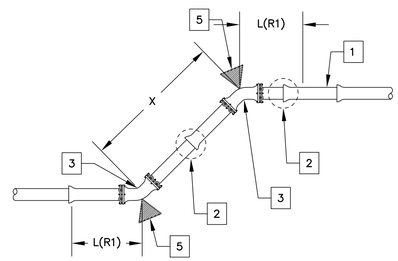

HORIZONTAL OFFSET (PLAN VIEW)-USE WHEN X<18 FT
NOT TO SCALE

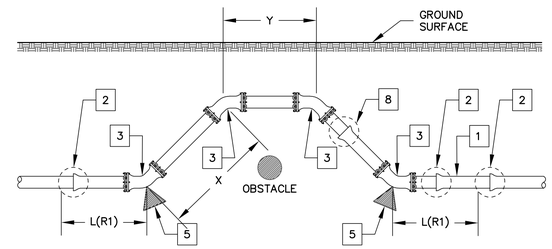

COMBINED VERTICAL OFFSET-ABOVE OBSTACLE (PROFILE VIEW)-USE WHEN X & Y < 18 FT
NOT TO SCALE

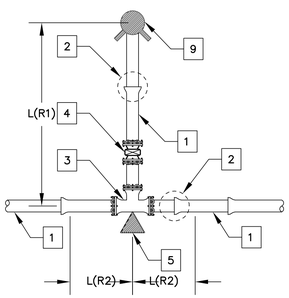

HYDRANT BRANCH (PLAN VIEW)
NOT TO SCALE

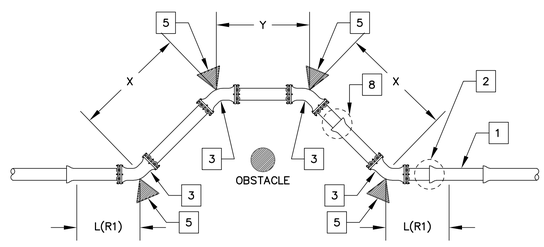

COMBINED HORIZONTAL OFFSET (PLAN VIEW)-USE WHEN X & Y < 18 FT
NOT TO SCALE

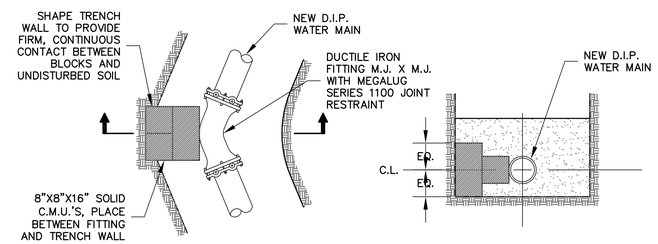

PLAN VIEW

PROFILE VIEW

PRECAST CONCRETE THRUST BLOCKING
NOT TO SCALE

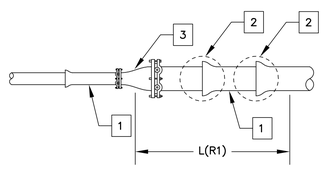

REDUCER
NOT TO SCALE

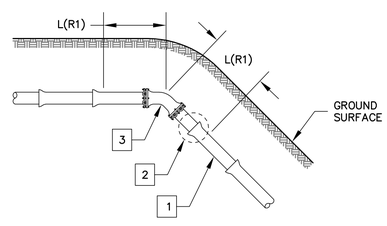

VERTICAL DOWN-BEND (PROFILE VIEW)
NOT TO SCALE

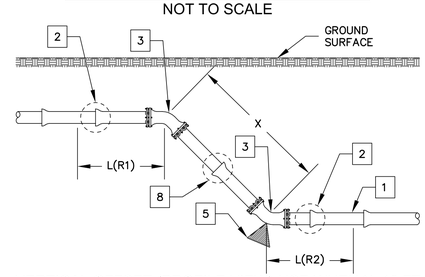

VERTICAL OFFSET (PROFILE VIEW)-USE WHEN X<18 FT
NOT TO SCALE

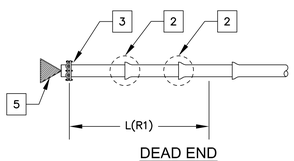

DEAD END
NOT TO SCALE

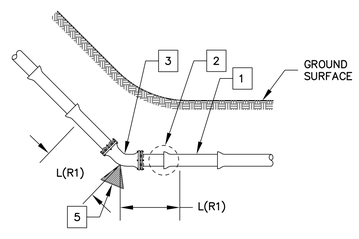

VERTICAL UP-BEND (PROFILE VIEW)
NOT TO SCALE

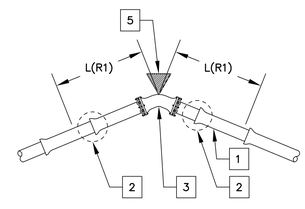

HORIZONTAL BEND (PLAN VIEW)
NOT TO SCALE

REQUIRED THRUST RESTRAINT LENGTHS - 150 PSI

CONFIGURATION	8" PIPE THRUST RESTRAINT LENGTHS (FEET)	
	BARE PIPE	
	L(R1)	L(R2)
TEE WITH BRANCH LINE 12"x8"	40	8
TEE WITH BRANCH LINE 8"x6"	29	8
TAPPING SLEEVE & VALVE W/BRANCH LINE 12"x8"	53	-
HYDRANT BRANCH	29	8
DEAD END 8"	53	-
DEAD END 12"	76	-
REDUCER 12"x8"	40	-
COMBINED HORIZONTAL BENDS	21	-
HORIZONTAL OFFSET	21	-
COMBINED HORIZONTAL OFFSET	21	-
VERTICAL DOWN-BEND	22	-
VERTICAL UP-BEND	11	-
COMBINED VERTICAL OFFSET-BENEATH OBSTACLE	44	-
COMBINED VERTICAL OFFSET-ABOVE OBSTACLE	21	-
HORIZONTAL BEND	11	-
VERTICAL OFFSET	44	21

GENERAL NOTES REGARDING THRUST RESTRAINT

1. CONTACT THE ENGINEER FOR SPECIFIC THRUST-RESTRAINT INSTRUCTION FOR ANY TEE, BEND, OR OFFSET CONFIGURATION THAT DEVIATES SIGNIFICANTLY FROM THOSE INDICATED IN THE THRUST RESTRAINT DETAIL.
2. ANTICIPATE THE NEED FOR THRUST RESTRAINT IN ADVANCE OF CONSTRUCTION, AND PLACE THRUST RESTRAINTS WHERE REQUIRED AS PIPE IS LAID
3. RESTRAIN ALL JOINTS THAT FALL BETWEEN RESTRAINED BENDS IN HORIZONTAL OR VERTICAL OFFSETS.
4. THE REQUIRED THRUST RESTRAINT LENGTHS INDICATED IN THE DETAILS ARE BASED ON TEST PRESSURES, BEDDING SOIL TYPE, AND PIPE-LAYING CONDITIONS REQUIRED IN THE CONTRACT DOCUMENTS. CONTACT THE ENGINEER FOR RECALCULATION OF REQUIRED THRUST RESTRAINT LENGTHS IF AUTHORIZED DEVIATIONS FROM REQUIRED TEST PRESSURES, BEDDING SOIL TYPE, OR PIPE-LAYING CONDITIONS BECOME NECESSARY.
5. RESTRAINT LENGTHS ARE BASED ON BARE PIPE. THRUST RESTRAINT LENGTHS MUST BE RECALCUTATED IF, AT ANY TIME, SOIL CONDITIONS REQUIRE WATER MAIN TO BE POLY-WRAPED.

I.D.	DESCRIPTION
1	NEW D.I.P. WATER MAIN
2	PUSH-ON JOINT WITHIN THRUST RESTRAINT ZONE, USE MEGALUG SERIES 1700 JOINT RESTRAINT, FIELD-LOK GASKET, OR ENGINEER APPROVED EQUIVALENT
3	DUCTILE IRON FITTING-M.J. X M.J., USE MEGALUG SERIES 1100 JOINT RESTRAINT
4	GATE VALVE-M.J. X M.J., USE MEGALUG SERIES 1100 JOINT RESTRAINT
5	PRECAST CONCRETE THRUST BLOCKING (SEE DETAIL, THIS SHEET)
6	EXISTING WATER MAIN
7	TAPPING SLEEVE WITH M.J. TAPPING VALVE
8	PUSH-ON JOINT BETWEEN BENDS IN AN OFFSET, USE MEGALUG SERIES 1700 JOINT RESTRAINT, FIELD-LOK GASKET, OR ENGINEER APPROVED EQUAL
9	FIRE OR FLUSHING HYDRANT-M.J. INLET, USE MEGALUG SERIES 1100 JOINT RESTRAINT
L(R1)	LENGTH OF PRIMARY THRUST RESTRAINT ZONE
L(R2)	LENGTH OF SECONDARY THRUST RESTRAINT ZONE

Designed By: JED
Drawn By: JED
Checked By: JEE
CAD File: THRUST

Drawing Scale: AS SHOWN
Drawing date: June 27, 2016

Rev.	Date	Revision	By

THRUST RESTRAINT DETAILS

PREPARED FOR
RAYMOND PLACE NEIGHBORHOOD
TOWN OF CROMWELL
Cromwell, Connecticut

Lenard Engineering, Inc.
Civil, Environmental and Hydrogeological Consultants
2210 Main Street GLASTONBURY, CT (860) 659-3100
140 Willow Street WINSTED, CT (860) 379-8669
19 Millstate Drive AUBURN, MA (508) 721-7800

Drawing #: D7

Job #: 14-421

K:\12-397 Cromwell\Production Drawings\THRUST.dwg 7/5/2016 11:20 AM